CNP 南方泵业	Product Information NISO200-150-250(Q)/15	Manufacturer	Nanfang Pump Industry Co.,Ltd (CNP)
		Address	Hangzhou, Zhejiang, China
		Contact	86-571-88637351
		Date	2025/07/14
Project Name		Client Name	WEPKO
		Client Addr.	
Item NO		Contacts	Wepko
		Contact	

Part NO.	1100343734
Product Picture: (Note: Images may not be the same as the product)	Note

Non-self-priming single-stage horizontal end-suction centrifugal pump with axial inlet and radial outlet,
The rear pull structure is adopted, and the pump body and pipeline are not dismantled for maintenance; The bearing frame is used to avoid axial channeling and improve the rigidity of the rotor components;

Technology

Pump rotator speed	1480
Nameplate standards	CE

Material

Pump body	QT500-7
Pump cover	HT200
Impeller	HT200
Pump shaft	20Cr13
Rubber code	P
Material Code	H

Installation

Type of coupling	coupling
Base type	Base
Maximum Operation Pressure	16bar
Maximum Inlet Pressure	6bar

Medium

Medium Temperature	-15°C~110°C

Structure dimension

Inlet & outlet size types	DN
Inlet Bore	200
Outlet Diameter	150
Rotation Direction	Anti-clockwise rotation viewing from inlet
Expolded view	NISO exploded view

Motor

Number of Motor Phase	Three Phase
Protection Class	IP55
Insulation Class	F
Motor Power(kW)	15KW
Power Frequency(Hz)	50HZ
Rated Voltage (V)	380V
Rated Current (A)	28.8
Energy Efficiency Level	IE3

Seal

Mechanical Seal	NISO-53/BSE4

Others

Weight (kg)	351

CNP 南方泵业	Performance Curve NISO200-150-250(Q)/15	Manufacturer	Nanfang Pump Industry Co.,Ltd (CNP)
		Address	Hangzhou, Zhejiang, China
		Contact	86-571-88637351
		Date	2025/07/14
Project Name		Client Name	WEPKO
		Client Addr.	
Item NO		Contacts	Wepko
		Contact	

The hydraulic performance curve have been tested with water at 20°C, density 1000kg/m³,and at 1bar atmospherical pressure. IS099062012 Grade 3B

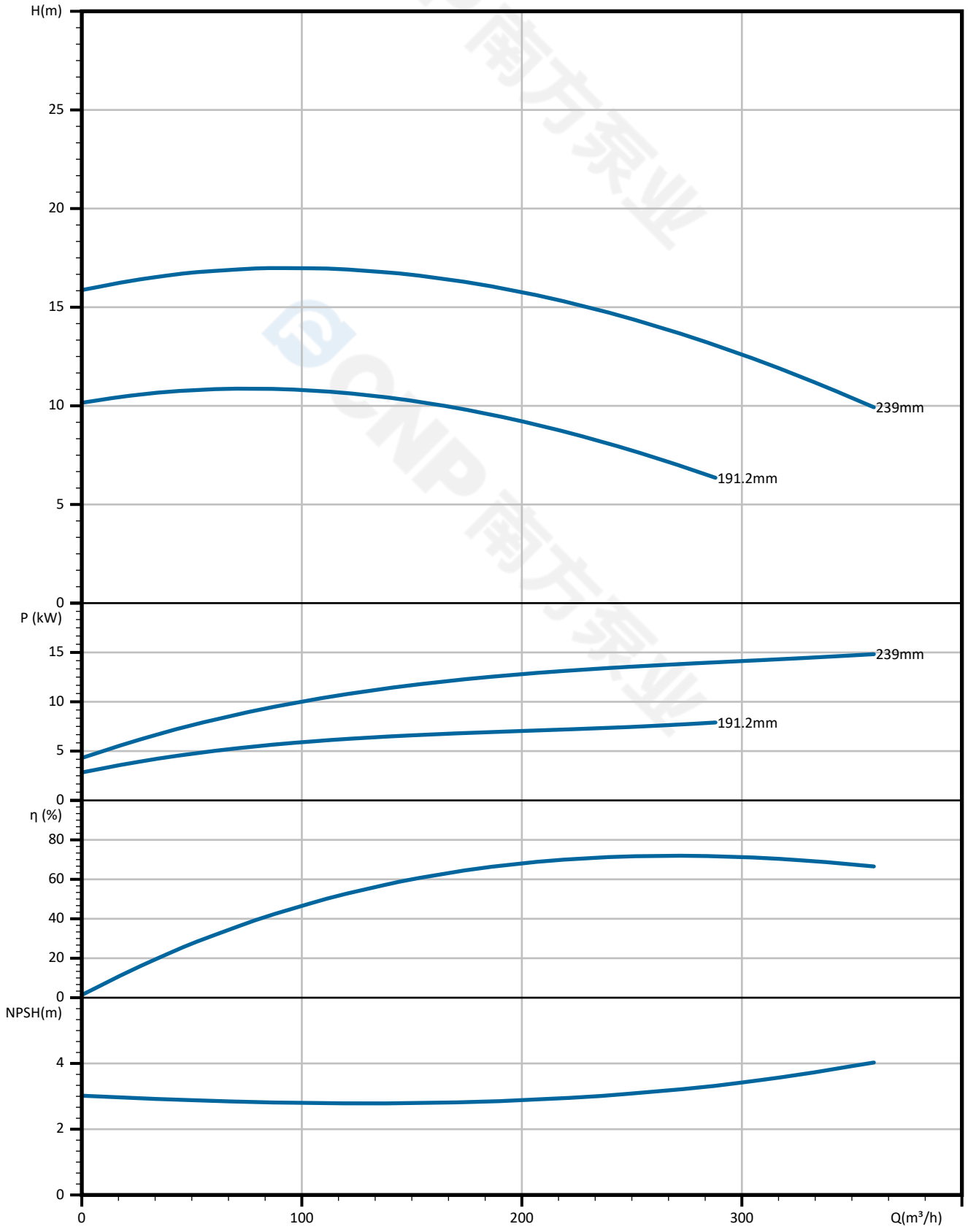

CNP 南方泵业	Pump Technical Parameters NISO200-150-250(Q)/15	Manufacturer	Nanfang Pump Industry Co.,Ltd (CNP)
		Address	Hangzhou, Zhejiang, China
		Contact	86-571-88637351
		Date	2025/07/14
Project Name		Client Name	WEPKO
		Client Addr.	
Item NO		Contacts	Wepko
		Contact	

Rated parameters	
Pump model	NISO200-150-250(Q)/15
Part NO.	1100343734
Rated flow	300 m³/h
Rated head	12.5 m
Rated efficiency	75.5 (%)
Power (kW)	13.5 kW
NPSHr (m)	3
Speed (rpm)	1480
Max impeller diameter (mm)	239

Medium	
Pumped medium	water
Working temperature (°C)	20
Medium density (kg/m³)	1000
Viscosity (mm²/s)	1

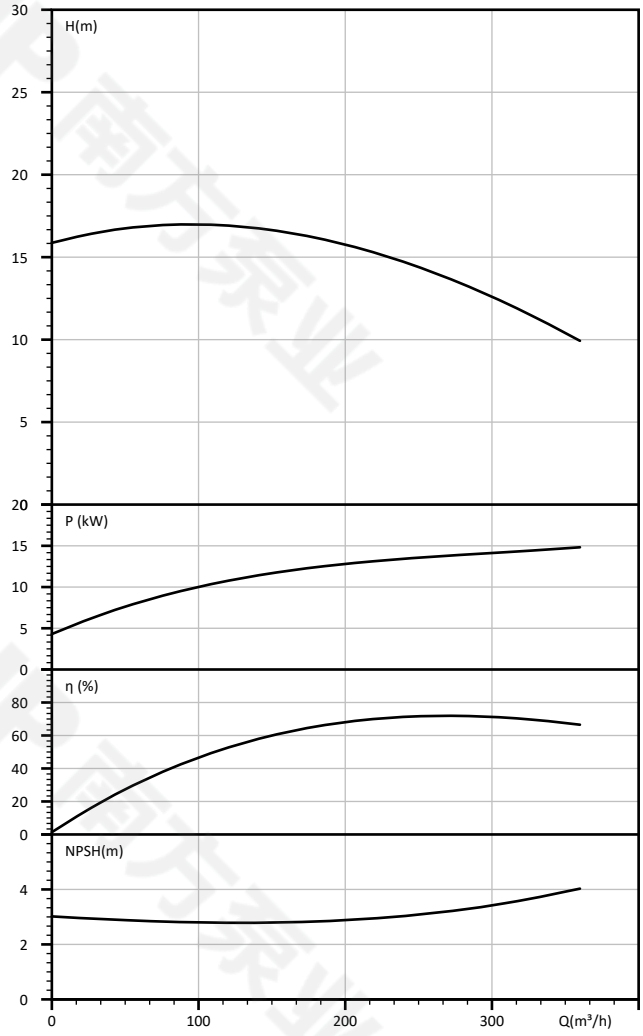

CNP 南方泵业	Dimension Drawing NISO200-150-250(Q)/15	Manufacturer	Nanfang Pump Industry Co.,Ltd (CNP)
		Address	Hangzhou, Zhejiang, China
		Contact	86-571-88637351
		Date	2025/07/14
Project Name		Client Name	WEPKO
		Client Addr.	
Item NO		Contacts	Wepko
		Contact	

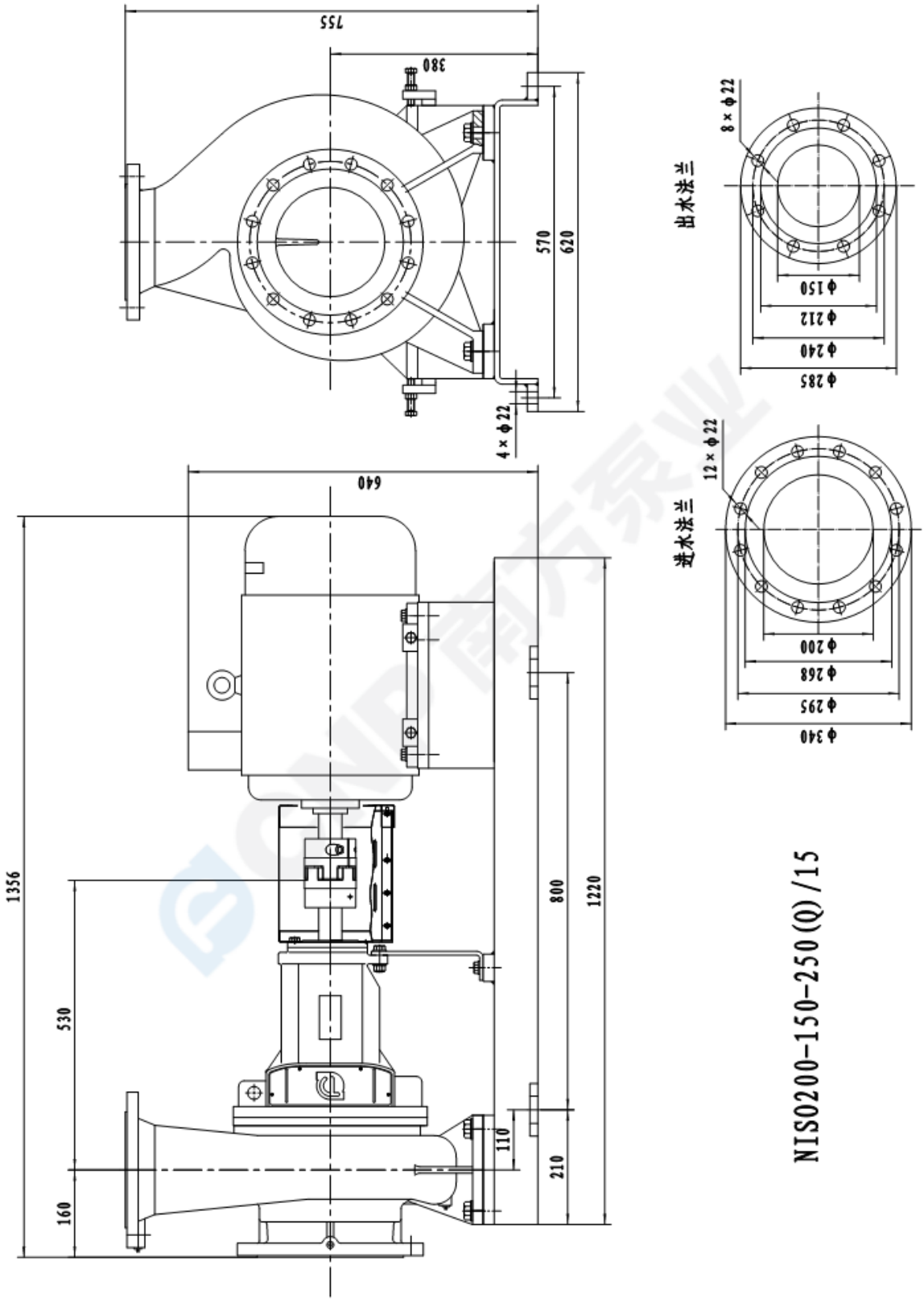

CNP 南方泵业	Expolded view NISO200-150-250(Q)/15	Manufacturer	Nanfang Pump Industry Co.,Ltd (CNP)
		Address	Hangzhou, Zhejiang, China
		Contact	86-571-88637351
		Date	2025/07/14
Project Name		Client Name	WEPKO
		Client Addr.	
Item NO		Contacts	Wepko
		Contact	

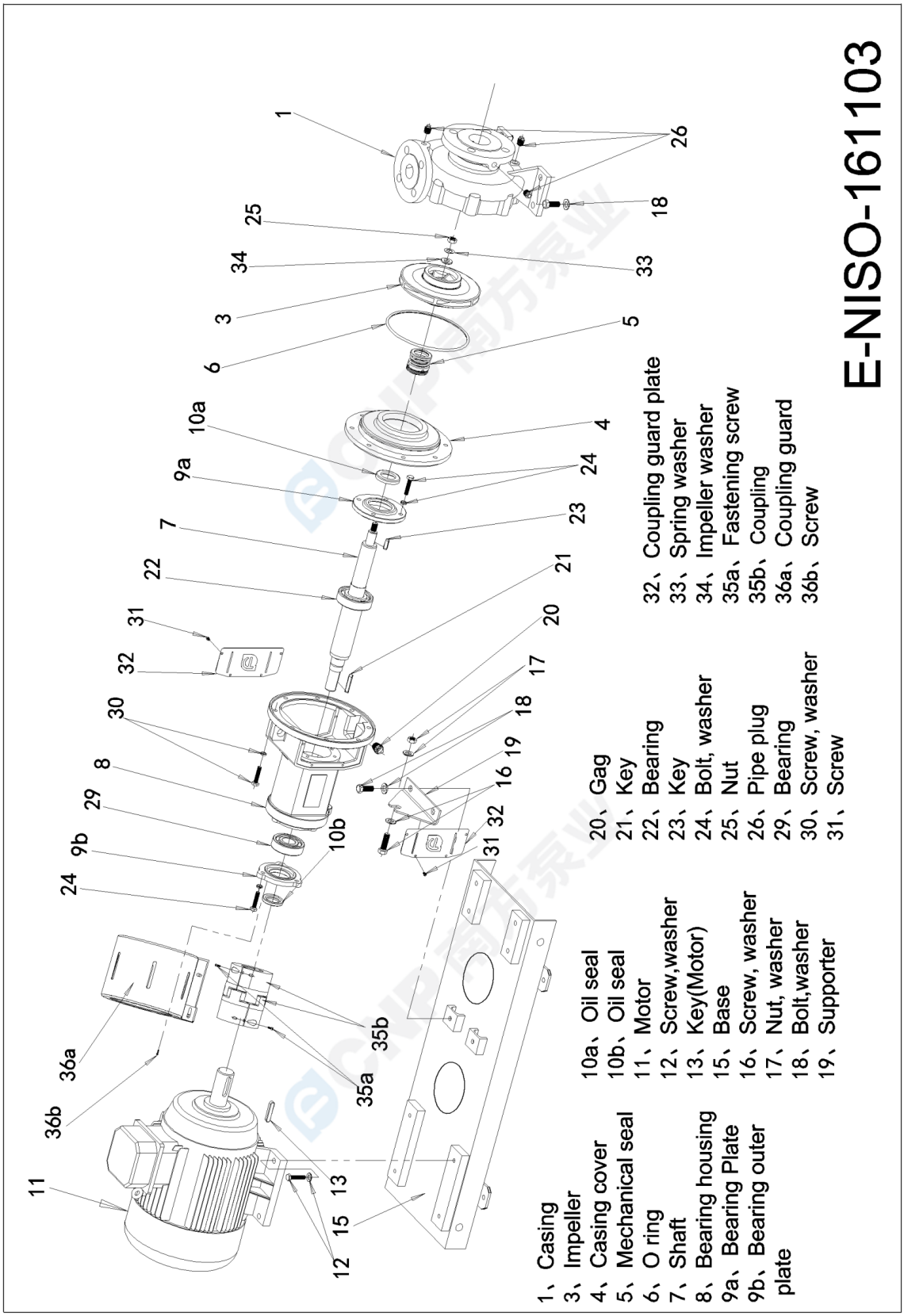

CNP 南方泵业	Physical picture NISO200-150-250(Q)/15	Manufacturer	Nanfang Pump Industry Co.,Ltd (CNP)
		Address	Hangzhou, Zhejiang, China
		Contact	86-571-88637351
		Date	2025/07/14
Project Name		Client Name	WEPKO
		Client Addr.	
Item NO		Contacts	Wepko
		Contact	

CNP 南方泵业	Order Data NISO200-150-250(Q)/15	Manufacturer	Nanfang Pump Industry Co.,Ltd (CNP)
		Address	Hangzhou, Zhejiang, China
		Contact	86-571-88637351
		Date	2025/07/14
Project Name		Client Name	WEPKO
		Client Addr.	
Item NO		Contacts	Wepko
		Contact	

Pump model	NISO200-150-250(Q)/15
Part NO.	1100343734
Product price	
Quantity	1
Total price	

Inquiry notes