CNP 南方泵业	Product Information CDM125-10	Manufacturer	Nanfang Pump Industry Co.,Ltd (CNP)
		Address	Hangzhou, Zhejiang, China
		Contact	86-571-88637351
		Date	2025/07/08
Project Name		Client Name	WEPKO
		Client Addr.	
Item NO		Contacts	
		Contact	

Part NO.	1100302044
Product Picture: (Note: Images may not be the same as the product)	Note
	CDM/CDMF pumps are new generation, high efficiency, non-self-priming vertical multistage centrifugal pumps (Abbr. as pumps). It referred to European standard, adopted entirely new industrial design, efficiency achieved MEI≥0.7. It is energy saving, low noise, environment friendly, compact design, beautiful shape, light weight, easy for service, high reliability.

Nameplate parameters

Flow	125 m^3/h
Head	254.5 m
Efficiency	83.9 %
Speed	2950 rpm
Number of stages	10

Technology

Pump rotator speed	2950
Nameplate standards	CE
Pump version	2

Material

Impeller	304
Rubber code	P
Inlet&outlet chamber	304
Material Code	S

Installation

Connection Code	F
Maximum Pressure/Temperature (high temperature)	40 bar / 120 °C
Maximum Pressure/Temperature (low temperature)	40 bar / -15 °C
Flange Standard	DIN
Pressure Class	PN25-40
Inlet & outlet	DN150

Medium

Medium Temperature normal temperature	-15°C+70°C
Medium Temperature high temperature	-15°C+120°C
Maximum Environment Temperature	40°C

Structure dimension

Model picture	F Flange
Expolded view	CDMF95,125,155exploded view

CNP 南方泵业	Product Information CDM125-10	Manufacturer	Nanfang Pump Industry Co.,Ltd (CNP)
		Address	Hangzhou, Zhejiang, China
		Contact	86-571-88637351
		Date	2025/07/08
Project Name		Client Name	WEPKO
		Client Addr.	
Item NO		Contacts	
		Contact	

Motor

Number of Motor Phase	Three Phase
Protection Class	IP55
Insulation Class	F
Motor Power(kW)	110KW
Power Frequency(Hz)	50HZ
Rated Voltage (V)	380V
Rated Current (A)	195A
Energy Efficiency Level	IE3

Seal

Mechanical Seal	CDM-28/WB1F14

Others

Weight (kg)	1268

CNP 南方泵业	Performance Curve CDM125-10	Manufacturer	Nanfang Pump Industry Co.,Ltd (CNP)
		Address	Hangzhou, Zhejiang, China
		Contact	86-571-88637351
		Date	2025/07/08
Project Name		Client Name	WEPKO
		Client Addr.	
Item NO		Contacts	
		Contact	

The hydraulic performance curve have been tested with water at 20°C, density 1000kg/m³,and at 1bar atmospherical pressure. IS099062012 Grade 3B

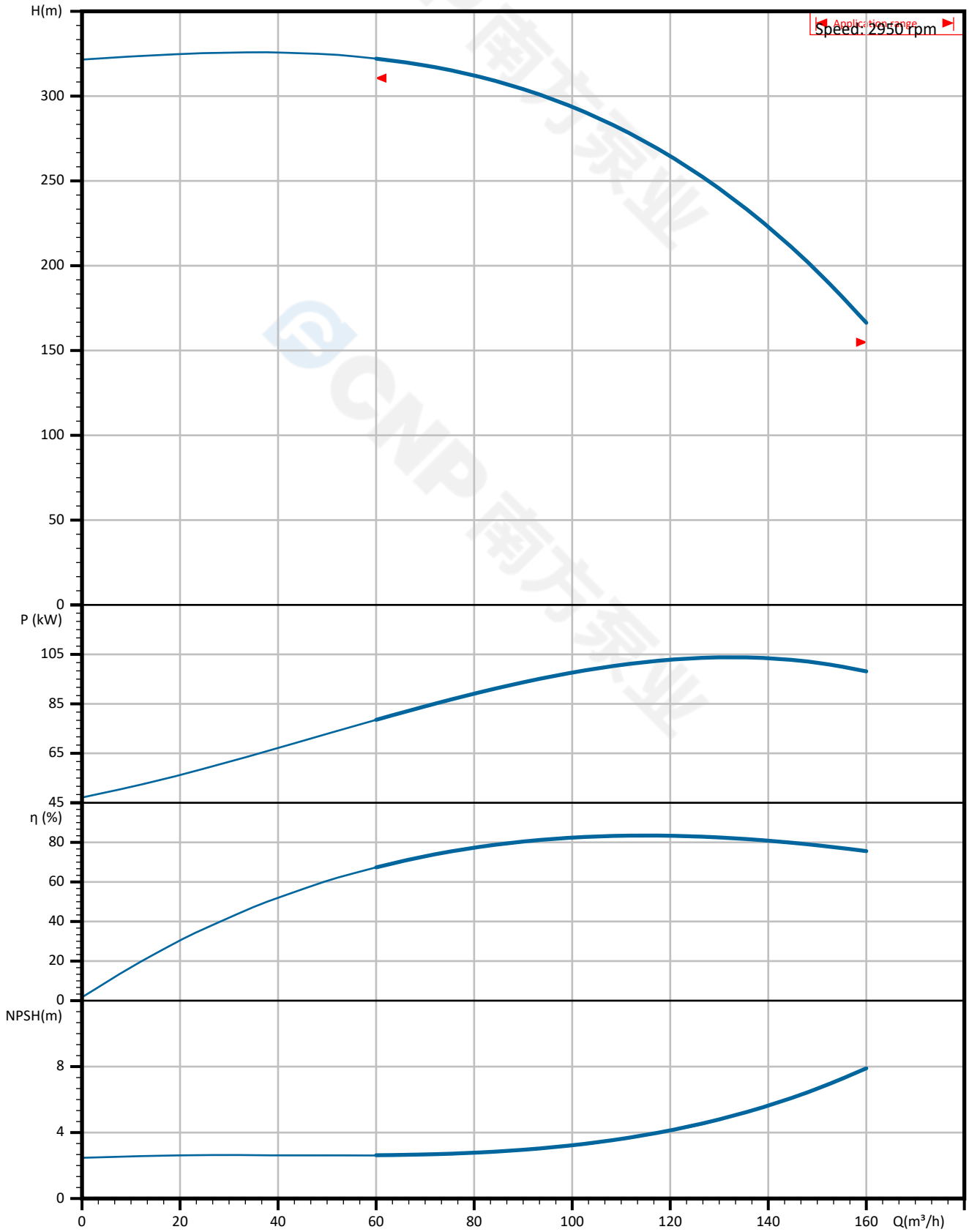

CNP 南方泵业	Pump Technical Parameters CDM125-10	Manufacturer	Nanfang Pump Industry Co.,Ltd (CNP)
		Address	Hangzhou, Zhejiang, China
		Contact	86-571-88637351
		Date	2025/07/08
Project Name		Client Name	WEPKO
		Client Addr.	
Item NO		Contacts	
		Contact	

Rated parameters	
Pump model	CDM125-10
Part NO.	1100302044
Rated flow	125 m³/h
Rated head	254.5 m
Rated efficiency	83.9 (%)
Power (kW)	103 kW
NPSHr (m)	4.4
Speed (rpm)	2950
Max impeller diameter (mm)	160

Medium	
Pumped medium	water
Working temperature (°C)	20
Medium density (kg/m³)	1000
Viscosity (mm²/s)	1

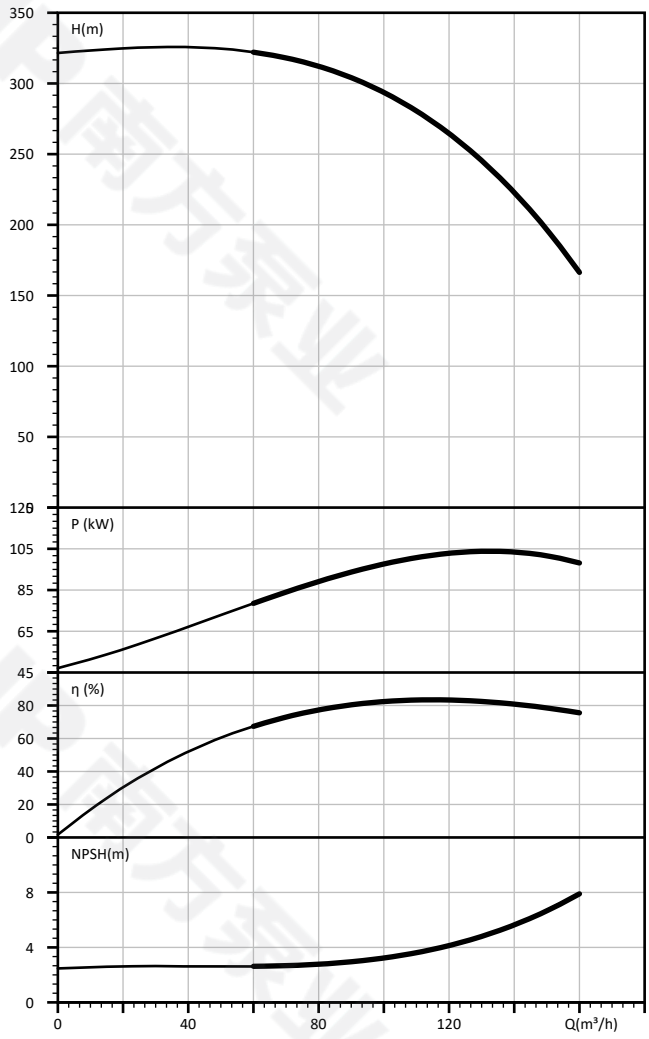

CNP 南方泵业	Dimension Drawing CDM125-10	Manufacturer	Nanfang Pump Industry Co.,Ltd (CNP)
		Address	Hangzhou, Zhejiang, China
		Contact	86-571-88637351
		Date	2025/07/08
Project Name		Client Name	WEPKO
		Client Addr.	
Item NO		Contacts	
		Contact	

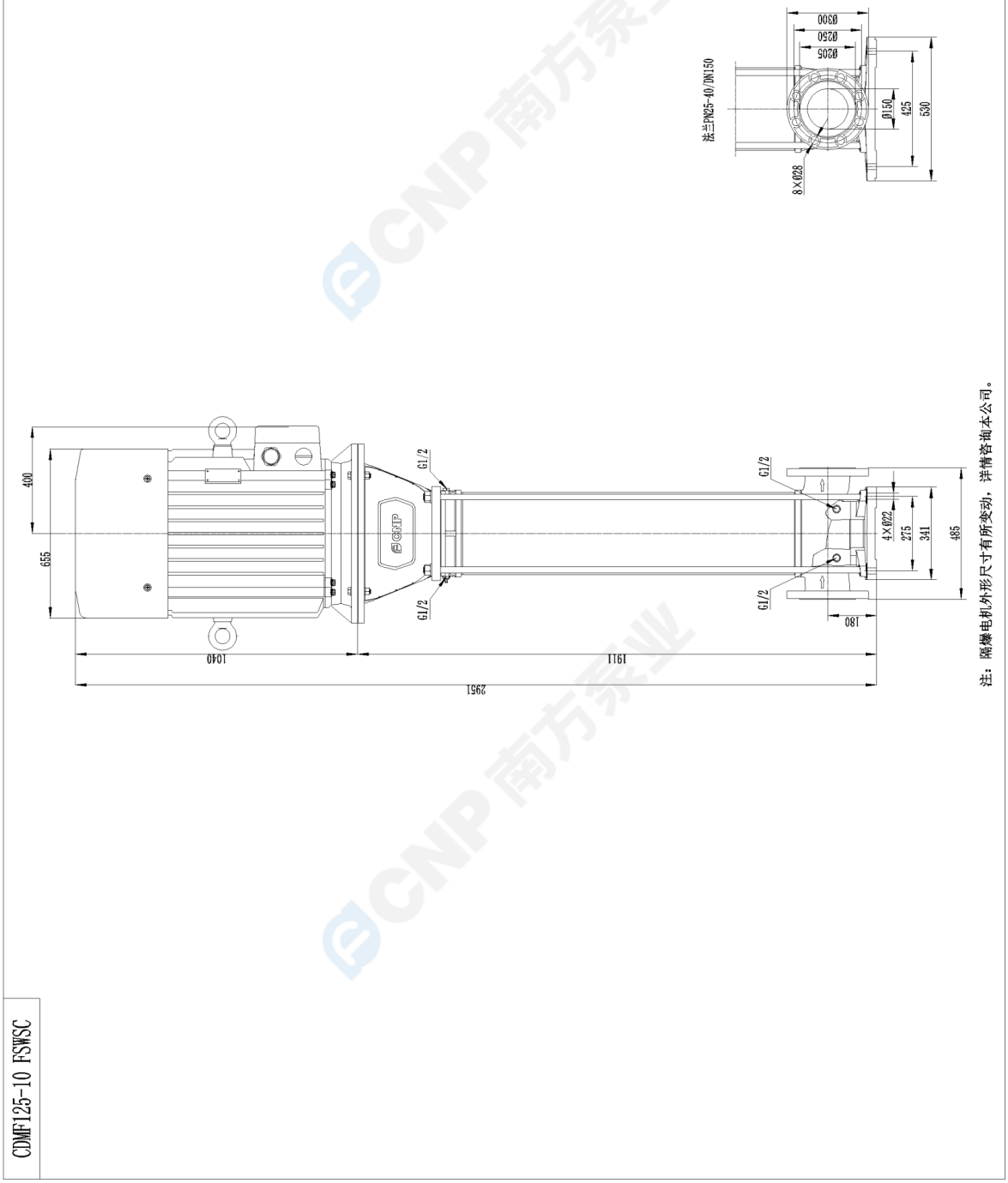

CNP 南方泵业	Expolded view CDM125-10	Manufacturer	Nanfang Pump Industry Co.,Ltd (CNP)
		Address	Hangzhou, Zhejiang, China
		Contact	86-571-88637351
		Date	2025/07/08
Project Name		Client Name	WEPKO
		Client Addr.	
Item NO		Contacts	
		Contact	

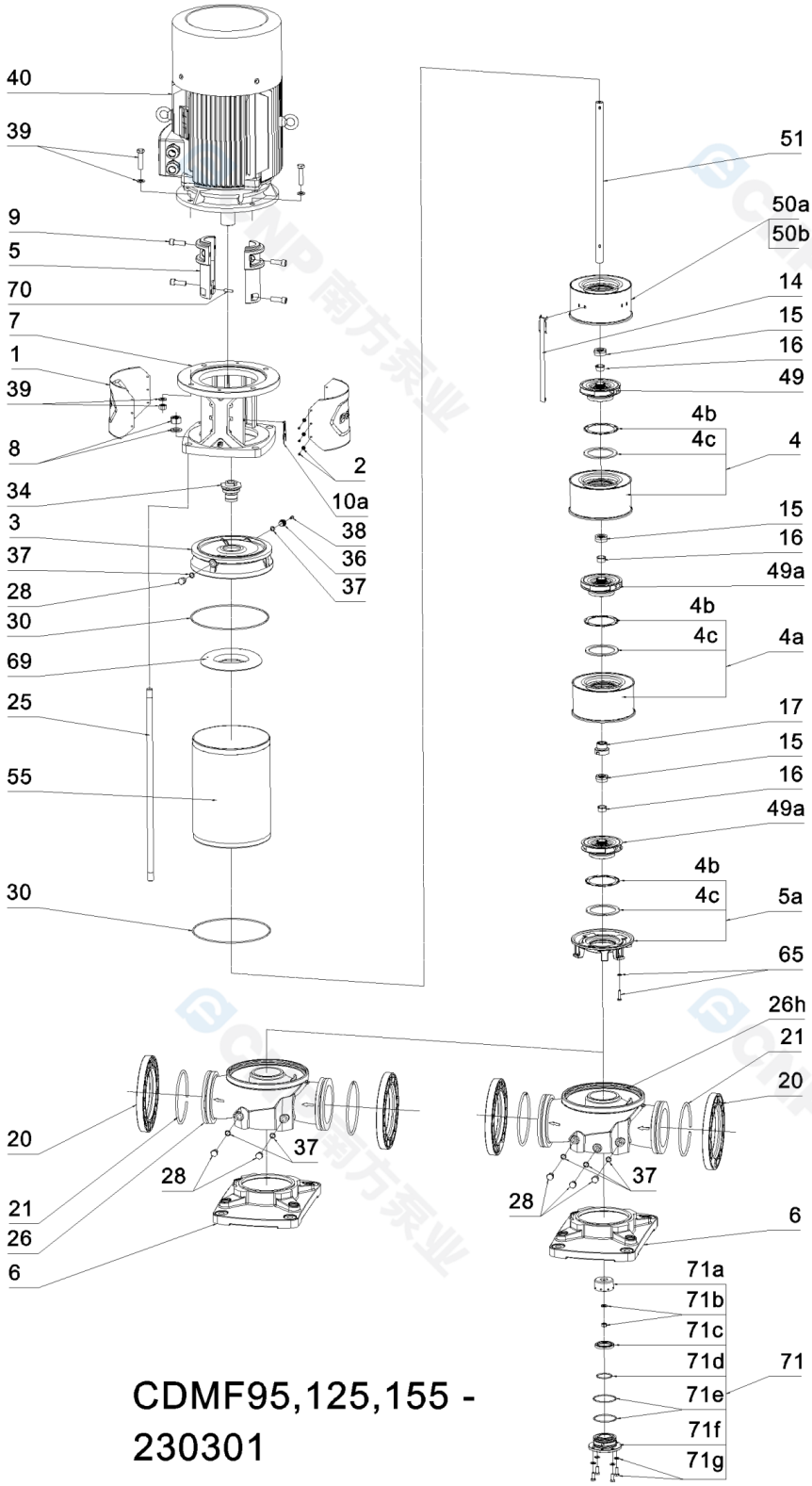

1、Coupling guard
2、Screw、Washer
3、Pump head
4、Diffuser
(1, 2 stage pump does not exist)
4a、Support diffuser
(Stage 1 pump does not exist)
4b、Neck ring cover
4c、Neck ring
5、Coupling
5a、Inducer
6、Base Plate
7、Bracket
8、Nut、Washer
9、Screw
10a、Adjustment sheet
14、Strap
15、Impeller nut
16、Cone
17、Intermediate bearing
20、Flange
21、Circlip
25、Staybolt
26、Inlet &outlet chamber
26h、Inlet &outlet chamber (THD)
28、Drain plug
30、O-ring
34、Mechanical seal
36、Air vent plug
37、O-ring 16×2.8
38、Air vent screw
39、Bolt、Nut、Washer
40、Motor
49、Small impeller
49a、Big impeller
50a、Top discharge diffuser
(Stage 1 pump does not exist)
50b、Top supporting diffuser
(Suitable for 1 stage pump only)
51、Shaft
55、Cylinder
65、Bolt、Washer
69、Discharge chamber
70、Shaft pin
71、Thrust balancing device (THD)
(Suitable for pumps ≥75kW only)
71a、THD dynamic ring
71b、Nut、Washer
71c、THD static ring
71d、O-ring
71e、O-ring
71f、Seal base
71g、Bolt、Washer

CNP 南方泵业	Physical picture CDM125-10	Manufacturer	Nanfang Pump Industry Co.,Ltd (CNP)
		Address	Hangzhou, Zhejiang, China
		Contact	86-571-88637351
		Date	2025/07/08
Project Name		Client Name	WEPKO
		Client Addr.	
Item NO		Contacts	
		Contact	

CNP 南方泵业	Order Data CDM125-10	Manufacturer	Nanfang Pump Industry Co.,Ltd (CNP)
		Address	Hangzhou, Zhejiang, China
		Contact	86-571-88637351
		Date	2025/07/08
Project Name		Client Name	WEPKO
		Client Addr.	
Item NO		Contacts	
		Contact	

Pump model	CDM125-10
Part NO.	1100302044
Product price	
Quantity	1
Total price	

Inquiry notes