CNP	Product Information WLTS100-5A/2.2	Manufacturer	CNP
		Address	Yuhang District, Hangzhou, Zhejiang,
		Contact	86-571-88637351
		Date	2022/03/08
Project Name		Client Name	DPA
		Client Addr.	
Item NO		Contacts	Alireza
		Contact	

Part NO.	1100119243

Product Picture	Note
	Non-self-priming, single stage, single suction, horizontal, axial suction and radical discharge. Motor is fixed with a baseplate, and the pump is easily to be installed for no support for pump body. Back-pull-out desiagn, easy to maintain. Pump shaft is the same one as motor shaft, small volume and light weight. The impeller and pump body are disigned through excellent hydraulic calculation.The optimum working condition of pump is set according to market demand, high efficiency. The main parts like impellers and casings are made of stainless steel. Castings adopt resin sand casting process, bright and clean surface, good appearance, compact structure

Material

Impeller	304
Pump body	HT200
Rubber code	NBR
Material Code	S

Installation

Connection Code	F
Installation type	horizontal
Maximum Operation Pressure	6Bar

Medium

Liquid Temperature Range	-15~+100

Structure dimension

Inlet & outlet size types	DN
Inlet Bore	100
Outlet Diameter	100
Rotation Direction	Anti-clockwise rotation viewing from inlet

Motor

Number of Motor Phase	Three Phase
Protection Class	IP55
Insulation Class	F
Motor Power	2.2
Power Frequency	50Hz
Rated Voltage (V)	380V

Seal

Mechanical Seal	TDS-28/BSP4

Others

Weight (kg)	68

CNP	Performance Curve WLTS100-5A/2.2	Manufacturer	CNP
		Address	Yuhang District, Hangzhou, Zhejiang,
		Contact	86-571-88637351
		Date	2022/03/08
Project Name		Client Name	DPA
		Client Addr.	
Item NO		Contacts	Alireza
		Contact	

The hydraulic performance curve have been tested withClean Waterat20°C,density 1000kg/m³,and at 1bar atmospherical pressure. IS099062012 Grade 3B

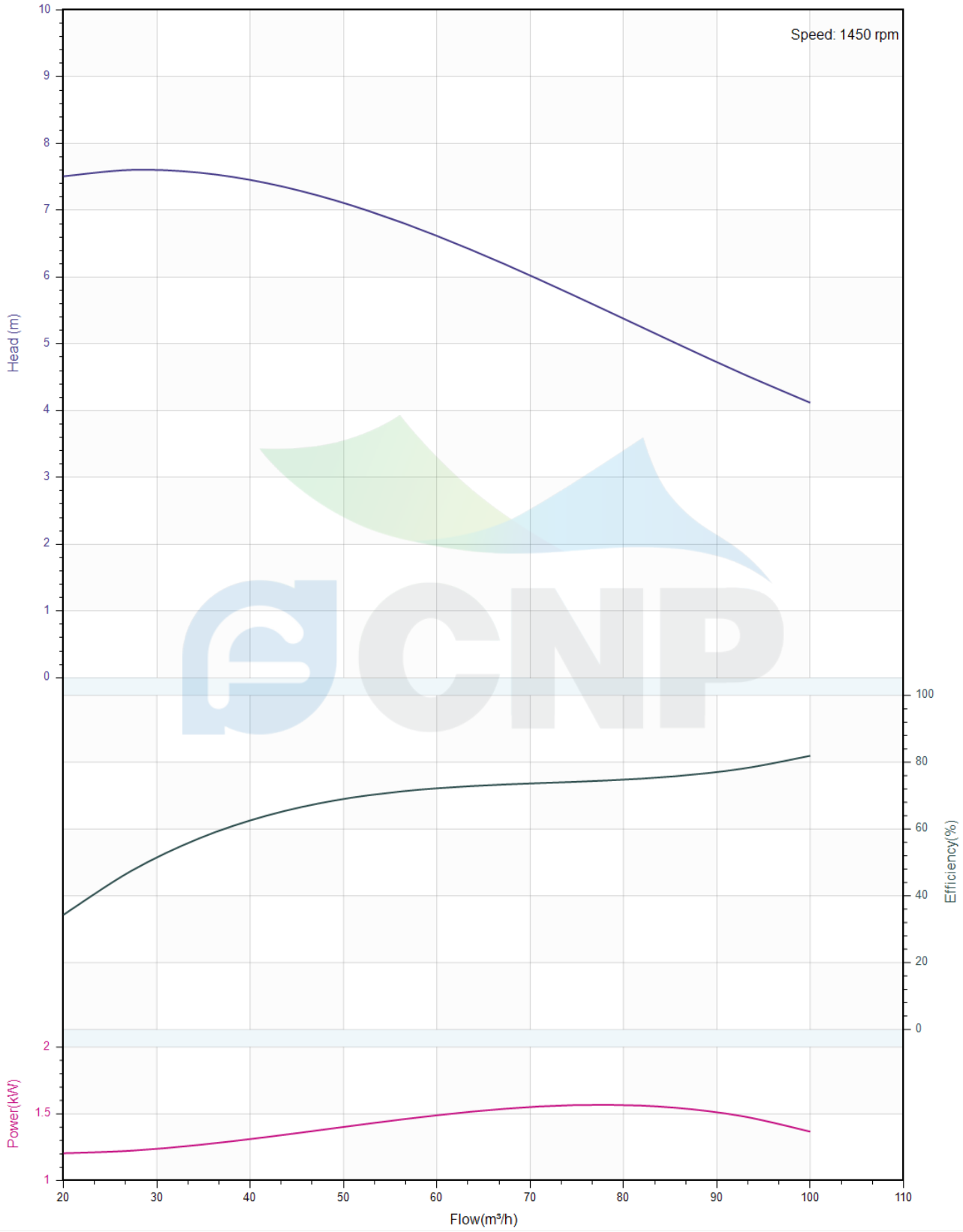

CNP	Pump Technical Parameters WLTS100-5A/2.2	Manufacturer	CNP
		Address	Yuhang District, Hangzhou, Zhejiang,
		Contact	86-571-88637351
		Date	2022/03/08
Project Name		Client Name	DPA
		Client Addr.	
Item NO		Contacts	Alireza
		Contact	

Rated parameters	
Pump model	WLTS100-5A/2.2
Part NO.	1100119243
Rated flow (m³/h)	80
Rated head (m)	5
Rated efficiency (%)	77.5
Power (kW)	2.2
Speed (rpm)	1450
Max impeller diameter (mm)	162

Medium	
Pumped medium	Clean Water
Working temperature (°C)	20
Medium density (kg/m³)	1000
Viscosity (mm²/s)	1

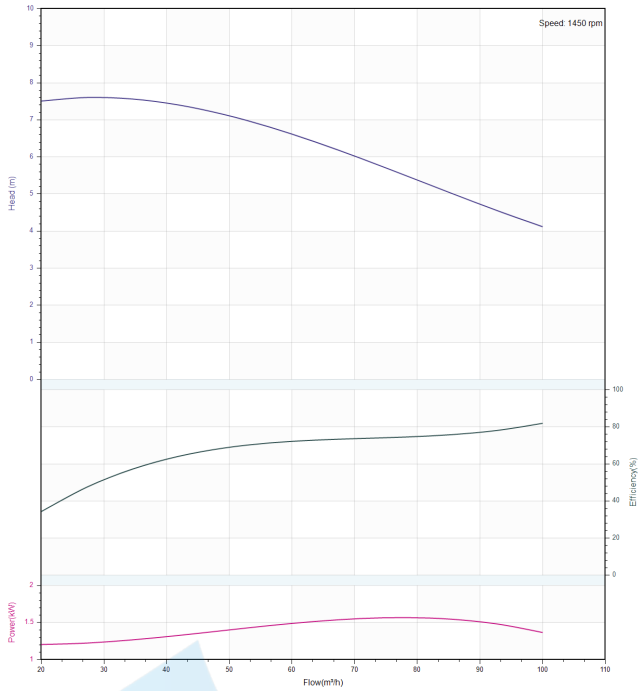

	Structure picture WLTS100-5A/2.2	Manufacturer	CNP
		Address	Yuhang District, Hangzhou, Zhejiang,
		Contact	86-571-88637351
		Date	2022/03/08
Project Name		Client Name	DPA
		Client Addr.	
Item NO		Contacts	Alireza
		Contact	

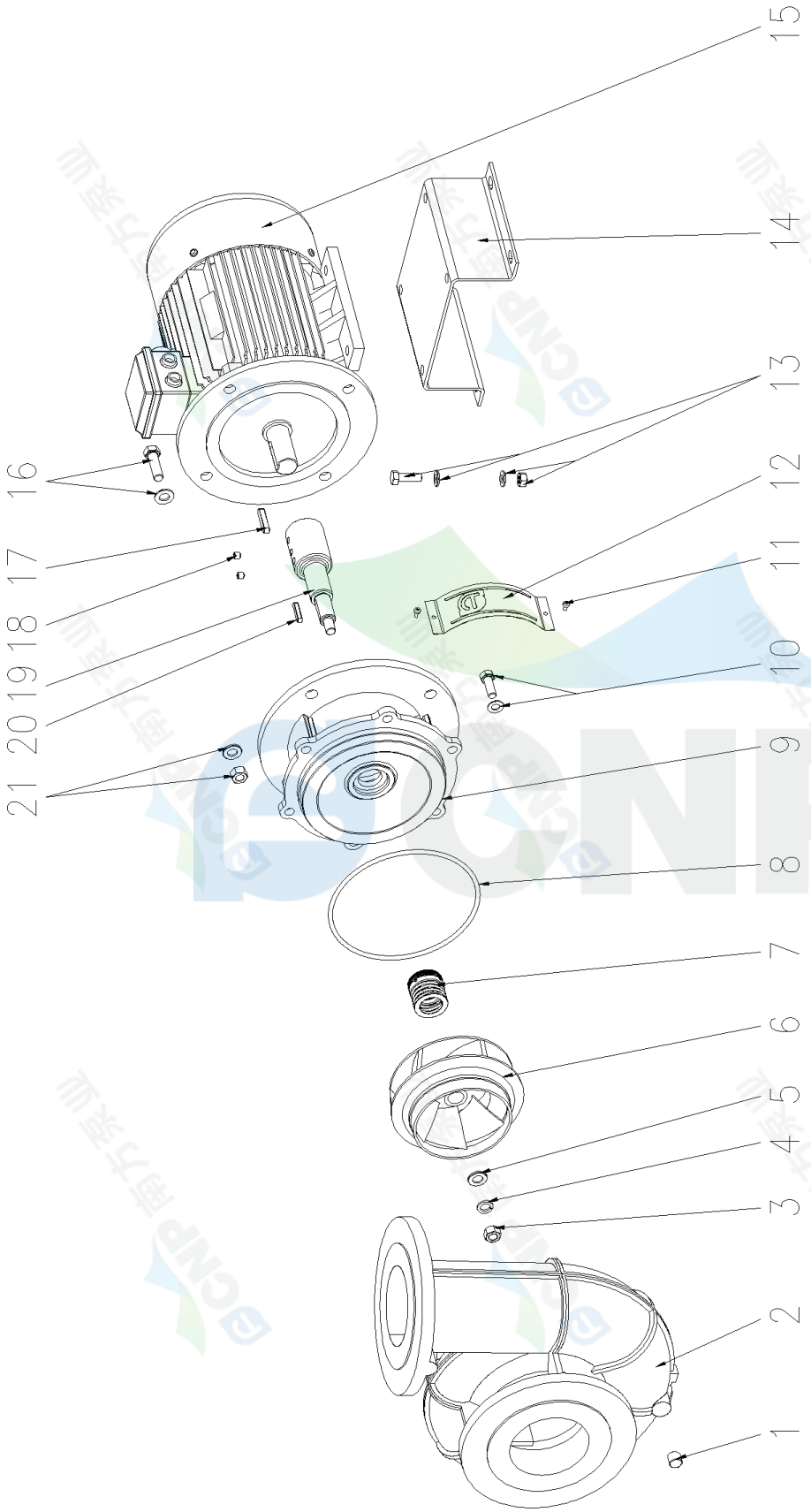

1、Ripe plug 2、Casing 3、Nut 4、Spring washer 5、Impeller washer
6、Impeller 7、Mechanical seal 8、O ring 9、Pump head 10、Bolt、washer
11、Cross recessed pan head screw 12、Protection board 13、Bolt、washer、nut
14、Base 15、Motor 16、Bolt、washer 17、Key 18、Set screw 19、Shaft
20、Key 21、Nut、washer
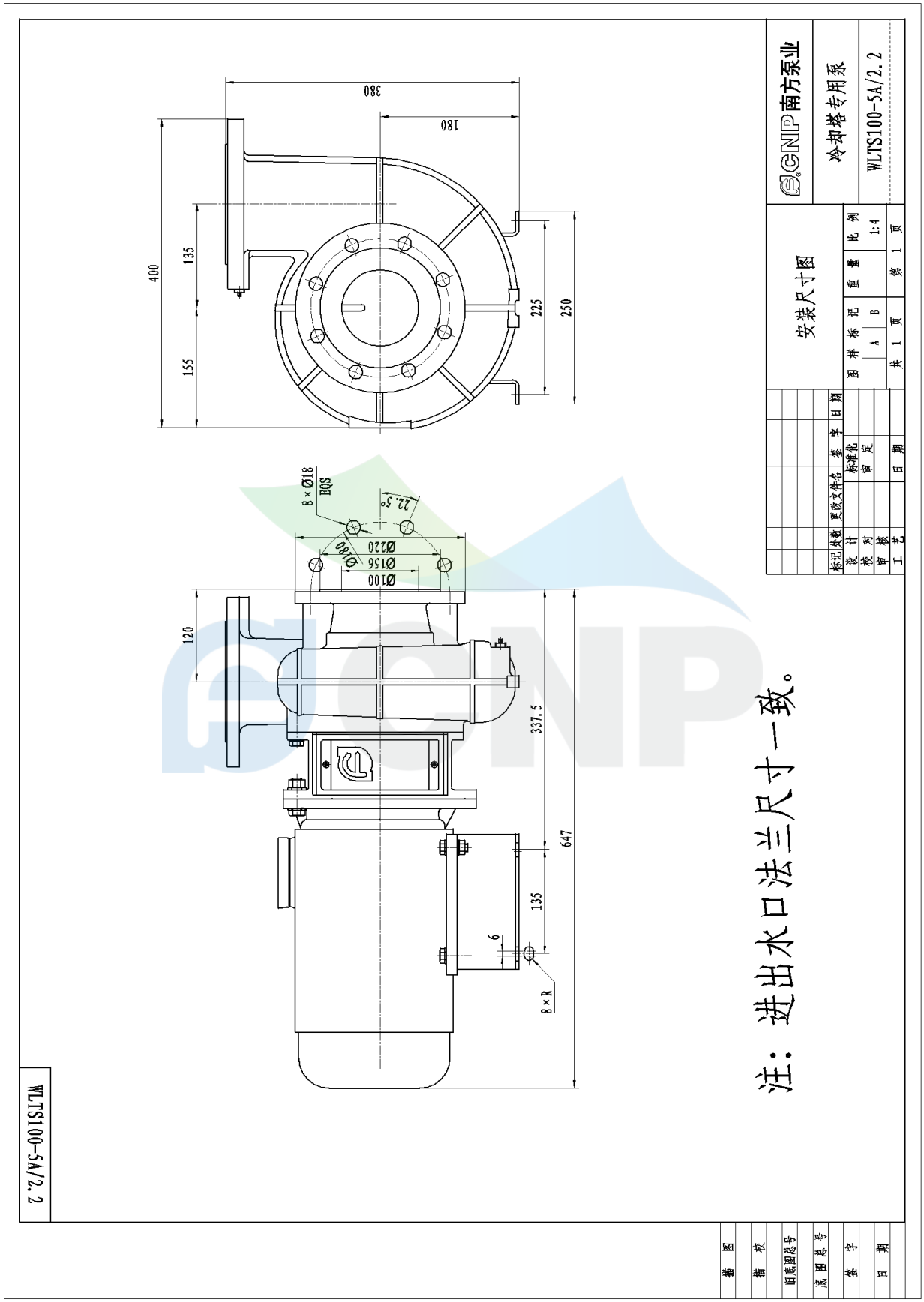
CNP	**Dimension Drawing** **WLTS100-5A/2.2**	Manufacturer	CNP
		Address	Yuhang District, Hangzhou, Zhejiang,
		Contact	86-571-88637351
		Date	2022/03/08
Project Name		Client Name	DPA
		Client Addr.	
Item NO		Contacts	Alireza
		Contact