CNP 南方泵业	Product Information NISF80-50-200/11	Manufacturer	Nanfang Pump Industry Co.,Ltd (CNP)
		Address	Hangzhou, Zhejiang, China
		Contact	86-571-88637351
		Date	2026/10/19
Project Name		Client Name	
		Client Addr.	
Item NO		Contacts	Laya
		Contact	

Part NO.	1100150274
Product Picture: (Note: Images may not be the same as the product)	Note
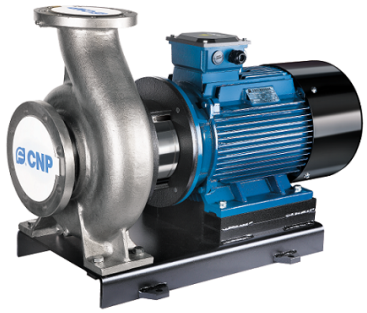	Non-self-priming single-stage horizontal end-suction centrifugal pump with axial inlet and radial outlet,using pull-back structure, no need to dismantle the pump body and pipeline for maintenance, using direct connection and extended shaft structure, the pump is small in size, compact in structure and simple in installation.

Technology

Pump rotator speed	2950

Material

Pump body	304
Pump cover	304
Impeller	304
Pump shaft	304
Rubber code	P
Material Code	F

Installation

Maximum Operation Pressure	16bar
Maximum Inlet Pressure	6bar

Medium

Medium Temperature	-15°C~110°C
Inlet & outlet size types	DN
Inlet Bore	80
Outlet Diameter	50
Rotation Direction	Anti-clockwise rotation viewing from inlet
Expolded view	NISF exploded view

Motor

Number of Motor Phase	Three Phase
Protection Class	IP55
Insulation Class	F
Motor Power(kW)	11KW
Power Frequency(Hz)	50HZ
Rated Voltage (V)	380V
Rated Current (A)	20.6
Energy Efficiency Level	IE3

Seal

Mechanical Seal	NISO-33/BSE4

Others

Weight (kg)	181

The manufacturer may change the dimensions and specifications without notice.

CNP 南方泵业	Performance Curve NISF80-50-200/11	Manufacturer	Nanfang Pump Industry Co.,Ltd (CNP)
		Address	Hangzhou, Zhejiang, China
		Contact	86-571-88637351
		Date	2026/10/19
Project Name		Client Name	
		Client Addr.	
Item NO		Contacts	Laya
		Contact	

The hydraulic performance curve have been tested with water at 20°C, density 1000kg/m³,and at 1bar at mospherical pressure.
IS099062012 Grade 3B

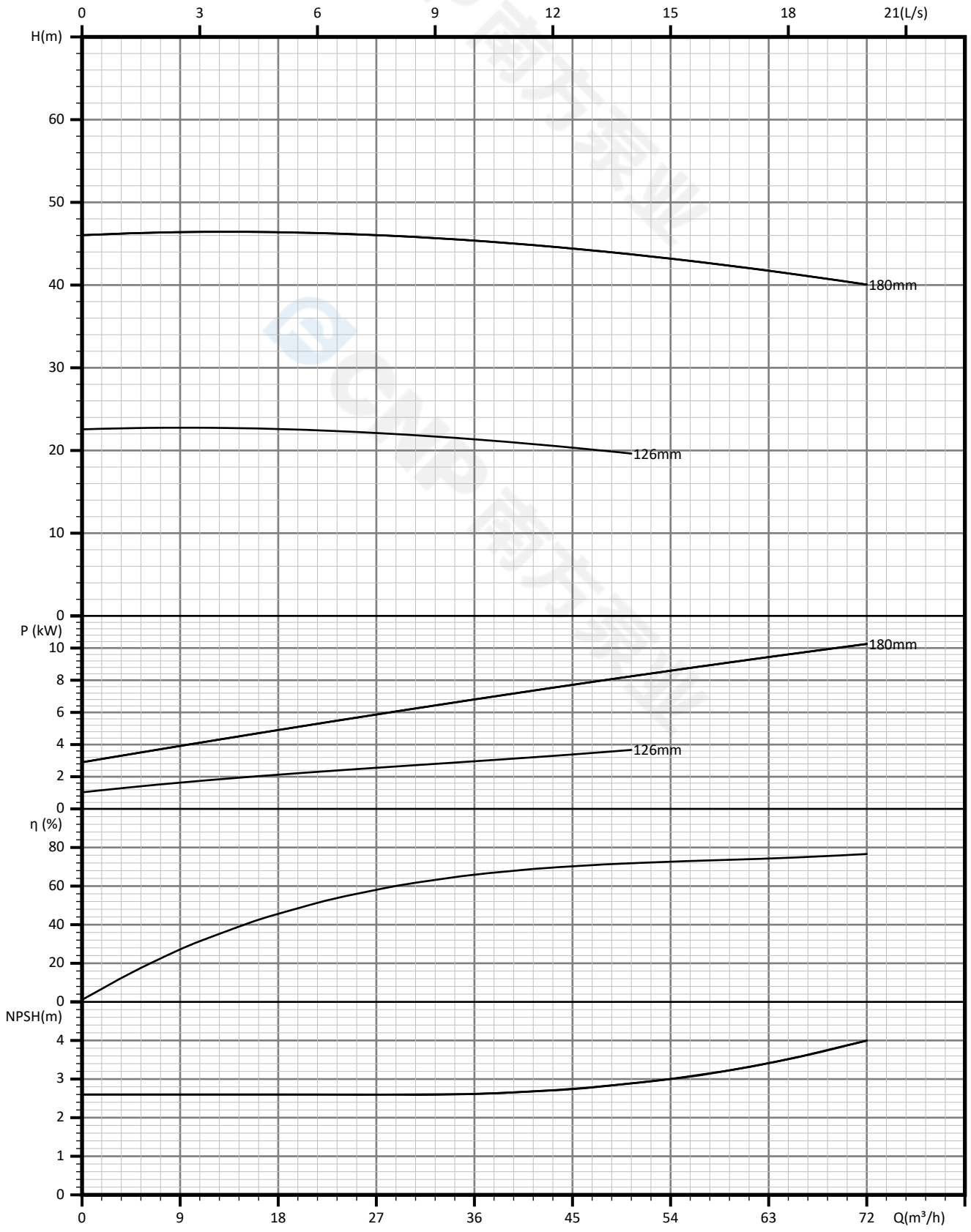

The manufacturer may change the dimensions and specifications without notice.

CNP 南方泵业	Pump Technical Parameters NISF80-50-200/11	Manufacturer	Nanfang Pump Industry Co.,Ltd (CNP)
		Address	Hangzhou, Zhejiang, China
		Contact	86-571-88637351
		Date	2026/10/19
Project Name		Client Name	
		Client Addr.	
Item NO		Contacts	Laya
		Contact	

Rated parameters	
Pump model	NISF80-50-200/11
Part NO.	1100150274
Rated flow	50 m³/h
Rated head	44 m
Rated Eta	71 %
Rated Power	8.44 kW
NPSHr	3 m
Speed	2950 rpm
Max impeller diameter	180 mm

Medium	
Pumped medium	water
Working temperature	20 °C
Medium density	1000 kg/m³
Viscosity	1 mm²/s

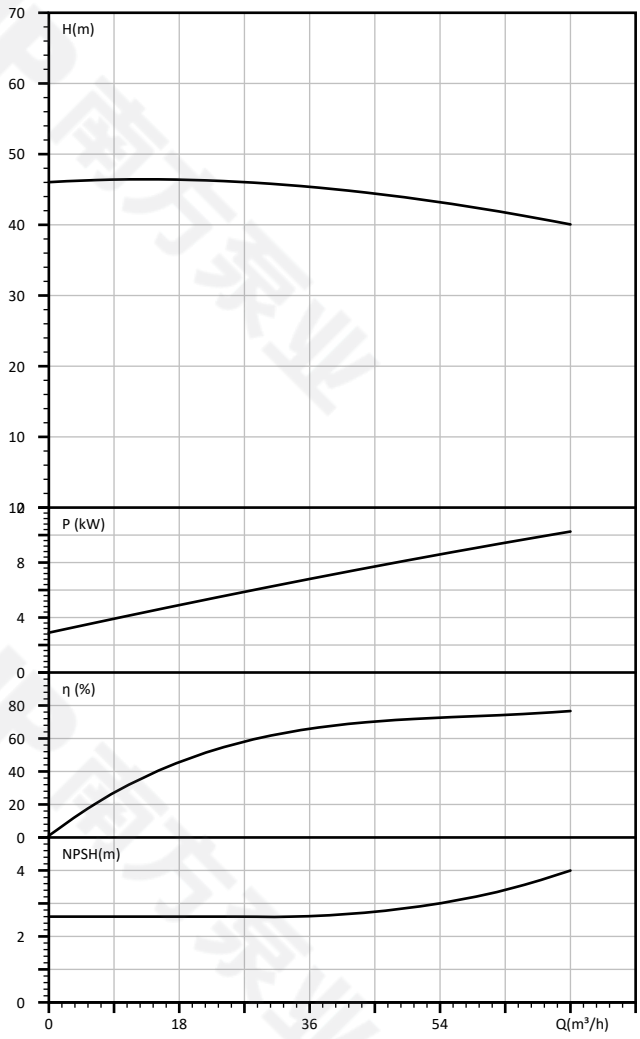

The manufacturer may change the dimensions and specifications without notice.

CNP 南方泵业	Dimension Drawing NISF80-50-200/11	Manufacturer	Nanfang Pump Industry Co.,Ltd (CNP)
		Address	Hangzhou, Zhejiang, China
		Contact	86-571-88637351
		Date	2026/10/19
Project Name		Client Name	
		Client Addr.	
Item NO		Contacts	Laya
		Contact	

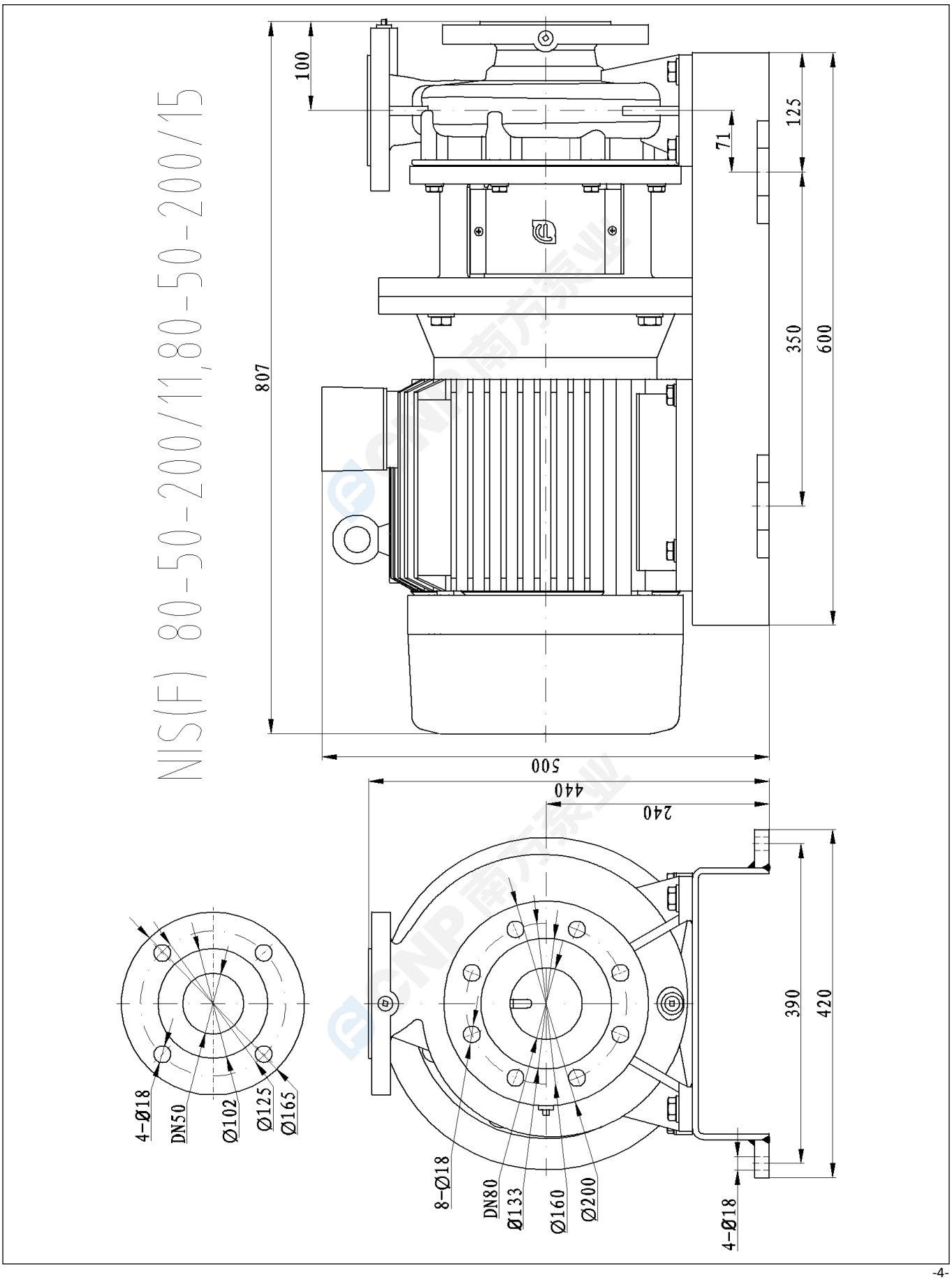

The manufacturer may change the dimensions and specifications without notice.

CNP 南方泵业	Expolded view NISF80-50-200/11	Manufacturer	Nanfang Pump Industry Co.,Ltd (CNP)
		Address	Hangzhou, Zhejiang, China
		Contact	86-571-88637351
		Date	2026/10/19
Project Name		Client Name	
		Client Addr.	
Item NO		Contacts	Laya
		Contact	

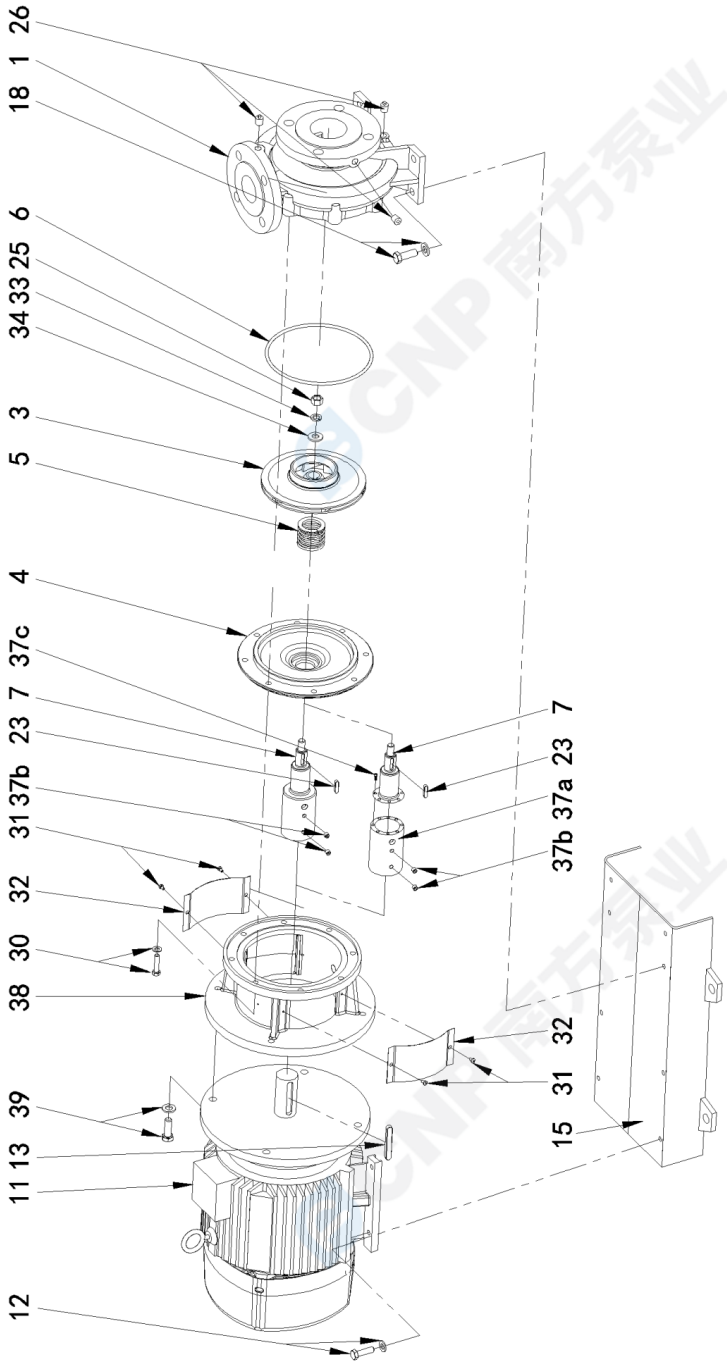

1、Casing
3、Impeller
4、Casing cover
5、Mechanical seal
6、O ring
7、Shaft
11、Motor
12、Screw,washer
13、Key(Motor)
15、Base
18、Bolt,washer
25、Nut
26、plug
30、Screw, washer
31、Screw
32、Coupling guard plate
33、Spring washer
34、Impeller washer
37a、Motor sleeve
37b、Fastening screw
37c、Inner hexagon screw
38、Pump head
39、Screw, washer

E-NIS, NISF-161102

The manufacturer may change the dimensions and specifications without notice.

CNP 南方泵业	Physical picture NISF80-50-200/11	Manufacturer	Nanfang Pump Industry Co.,Ltd (CNP)
		Address	Hangzhou, Zhejiang, China
		Contact	86-571-88637351
		Date	2026/10/19
Project Name		Client Name	
		Client Addr.	
Item NO		Contacts	Laya
		Contact	

The manufacturer may change the dimensions and specifications without notice.

CNP 南方泵业	Order Data NISF80-50-200/11	Manufacturer	Nanfang Pump Industry Co.,Ltd (CNP)
		Address	Hangzhou, Zhejiang, China
		Contact	86-571-88637351
		Date	2026/10/19
Project Name		Client Name	
		Client Addr.	
Item NO		Contacts	Laya
		Contact	

Pump model	NISF80-50-200/11
Part NO.	1100150274
Product price	
Quantity	1
Total price	

Inquiry notes