| CNP 南方泵业 | Product Information<br>NISF125-100-200/45 | Manufacturer | Nanfang Pump Industry Co.,Ltd (CNP) |
|---|---|---|---|
| | | Address | Hangzhou, Zhejiang, China |
| | | Contact | 86-571-88637351 |
| | | Date | 2026/10/20 |
| Project Name | | Client Name | |
| | | Client Addr. | |
| Item NO | | Contacts | Golsad |
| | | Contact | |

| Part NO. | 1100333769 |
|---|---|
| Product Picture: (Note: Images may not be the same as the product) | Note |
| 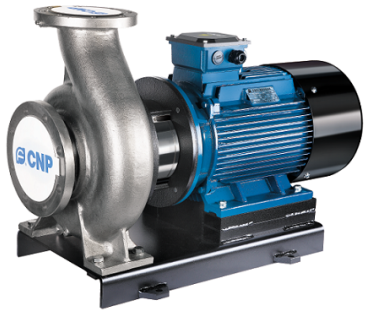 | Non-self-priming single-stage horizontal end-suction centrifugal pump with axial inlet and radial outlet,using pull-back structure, no need to dismantle the pump body and pipeline for maintenance, using direct connection and extended shaft structure, the pump is small in size, compact in structure and simple in installation. |

## Technology

| | |
|---|---|
| Pump rotator speed | 2950 |

## Material

| | |
|---|---|
| Pump body | 304 |
| Pump cover | 304 |
| Impeller | 304 |
| Pump shaft | 304 |
| Rubber code | P |
| Material Code | F |

## Installation

| | |
|---|---|
| Maximum Operation Pressure | 16bar |
| Maximum Inlet Pressure | 6bar |

## Medium

| | |
|---|---|
| Medium Temperature | -15°C~110°C |
| Inlet & outlet size types | DN |
| Inlet Bore | 125 |
| Outlet Diameter | 100 |
| Rotation Direction | Anti-clockwise rotation viewing from inlet |
| Expolded view | NISF exploded view |

## Motor

| | |
|---|---|
| Number of Motor Phase | Three Phase |
| Protection Class | IP55 |
| Insulation Class | F |
| Motor Power(kW) | 45KW |
| Power Frequency(Hz) | 50HZ |
| Rated Voltage (V) | 380V |
| Rated Current (A) | 80.8 |
| Energy Efficiency Level | IE3 |

## Seal

| | |
|---|---|
| Mechanical Seal | NISO-43/BSE4 |

## Others

| | |
|---|---|
| Weight (kg) | 431 |



The manufacturer may change the dimensions and specifications without notice.

| CNP 南方泵业 | Performance Curve<br>NISF125-100-200/45 | Manufacturer | Nanfang Pump Industry Co.,Ltd (CNP) |
|---|---|---|---|
| | | Address | Hangzhou, Zhejiang, China |
| | | Contact | 86-571-88637351 |
| | | Date | 2026/10/20 |
| Project Name | | Client Name | |
| | | Client Addr. | |
| Item NO | | Contacts | Golsad |
| | | Contact | |

The hydraulic performance curve have been tested with water at 20°C, density 1000kg/m³,and at 1bar at mospherical pressure.
IS099062012 Grade 3B

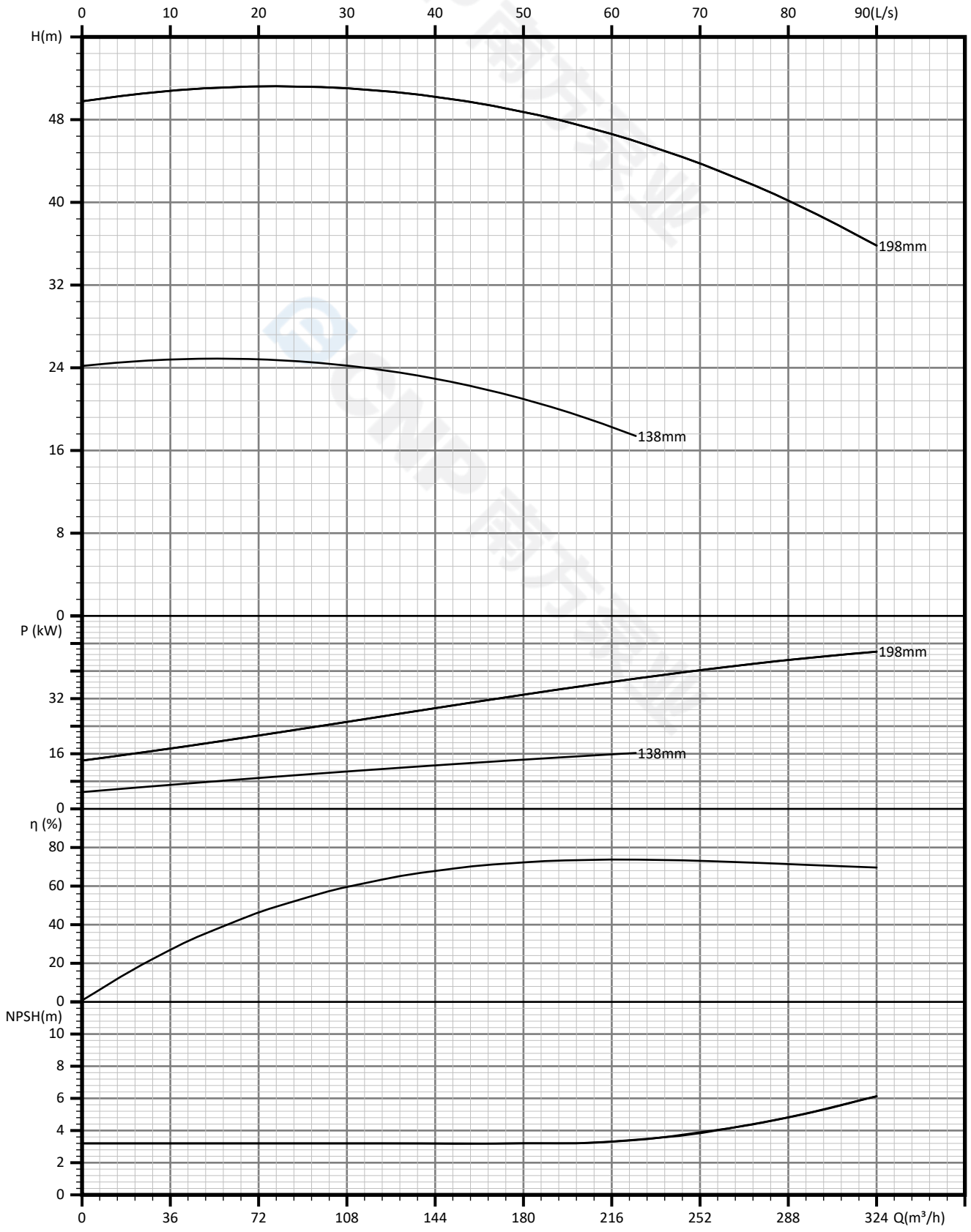




The manufacturer may change the dimensions and specifications without notice.

| CNP 南方泵业 | Pump Technical Parameters<br>NISF125-100-200/45 | Manufacturer | Nanfang Pump Industry Co.,Ltd (CNP) |
|---|---|---|---|
| | | Address | Hangzhou, Zhejiang, China |
| | | Contact | 86-571-88637351 |
| | | Date | 2026/10/20 |
| Project Name | | Client Name | |
| | | Client Addr. | |
| Item NO | | Contacts | Golsad |
| | | Contact | |

| Rated parameters | |
|---|---|
| Pump model | NISF125-100-200/45 |
| Part NO. | 1100333769 |
| Rated flow | 200 m³/h |
| Rated head | 48 m |
| Rated Eta | 73 % |
| Rated Power | 35.8 kW |
| NPSHr | 3.5 m |
| Speed | 2950 rpm |
| Max impeller diameter | 198 mm |

| Medium | |
|---|---|
| Pumped medium | water |
| Working temperature | 20 °C |
| Medium density | 1000 kg/m³ |
| Viscosity | 1 mm²/s |

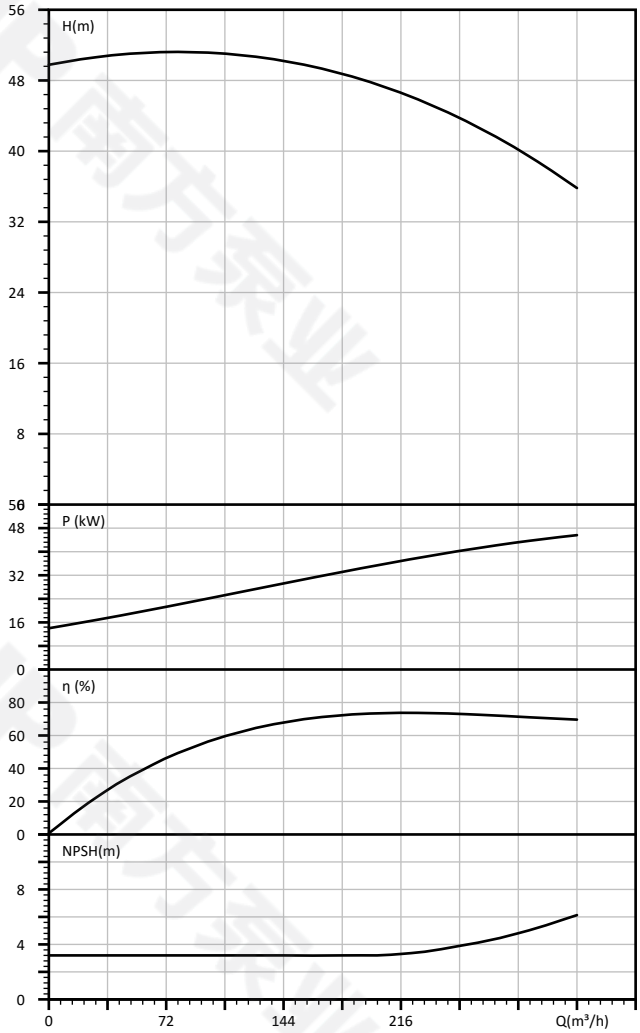




The manufacturer may change the dimensions and specifications without notice.

| CNP 南方泵业 | Dimension Drawing<br>NISF125-100-200/45 | Manufacturer | Nanfang Pump Industry Co.,Ltd (CNP) |
|---|---|---|---|
| | | Address | Hangzhou, Zhejiang, China |
| | | Contact | 86-571-88637351 |
| | | Date | 2026/10/20 |
| Project Name | | Client Name | |
| | | Client Addr. | |
| Item NO | | Contacts | Golsad |
| | | Contact | |

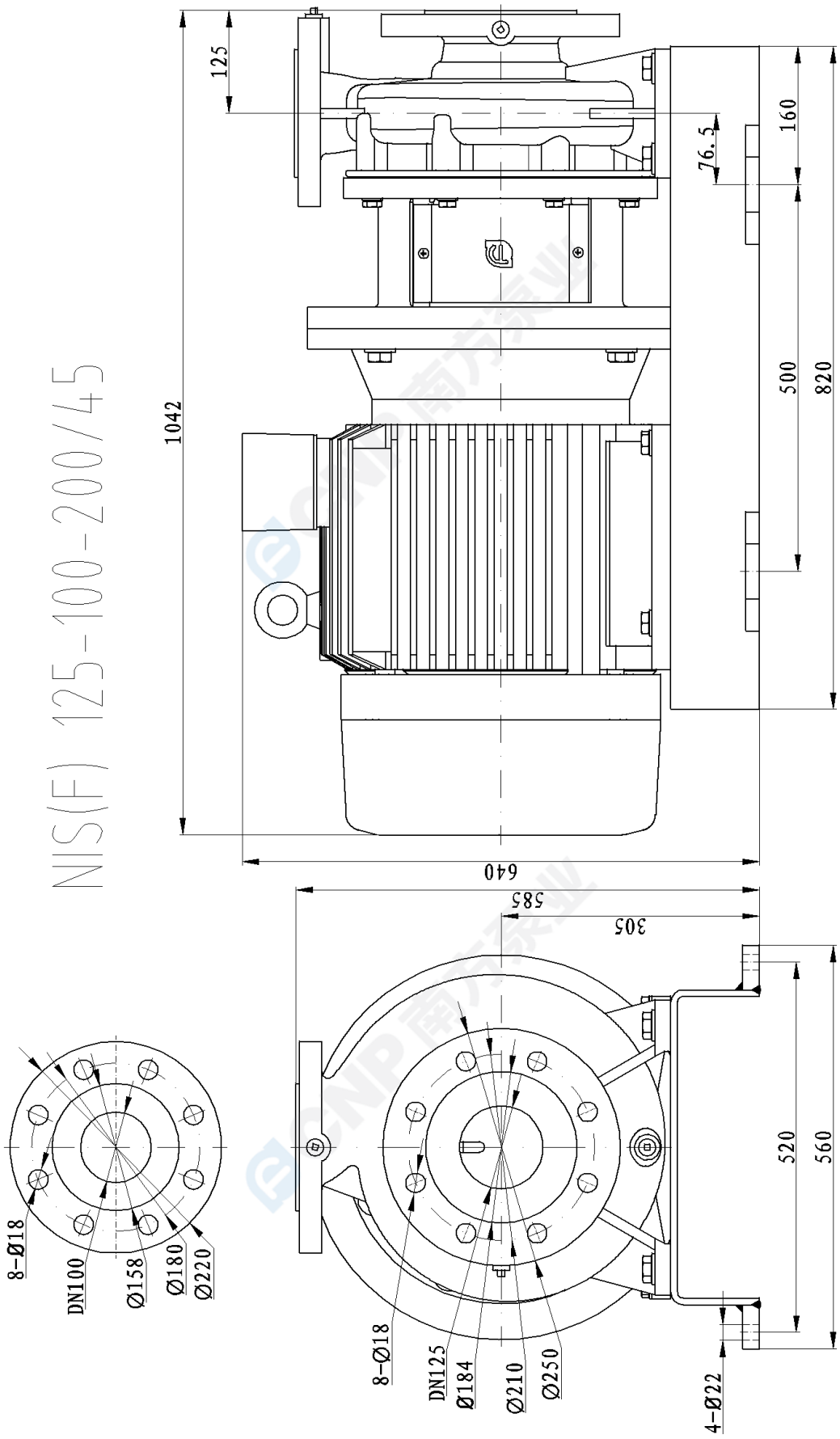




The manufacturer may change the dimensions and specifications without notice.

| CNP 南方泵业 | Expolded view<br>NISF125-100-200/45 | Manufacturer | Nanfang Pump Industry Co.,Ltd (CNP) |
|---|---|---|---|
| | | Address | Hangzhou, Zhejiang, China |
| | | Contact | 86-571-88637351 |
| | | Date | 2026/10/20 |
| Project Name | | Client Name | |
| | | Client Addr. | |
| Item NO | | Contacts | Golsad |
| | | Contact | |

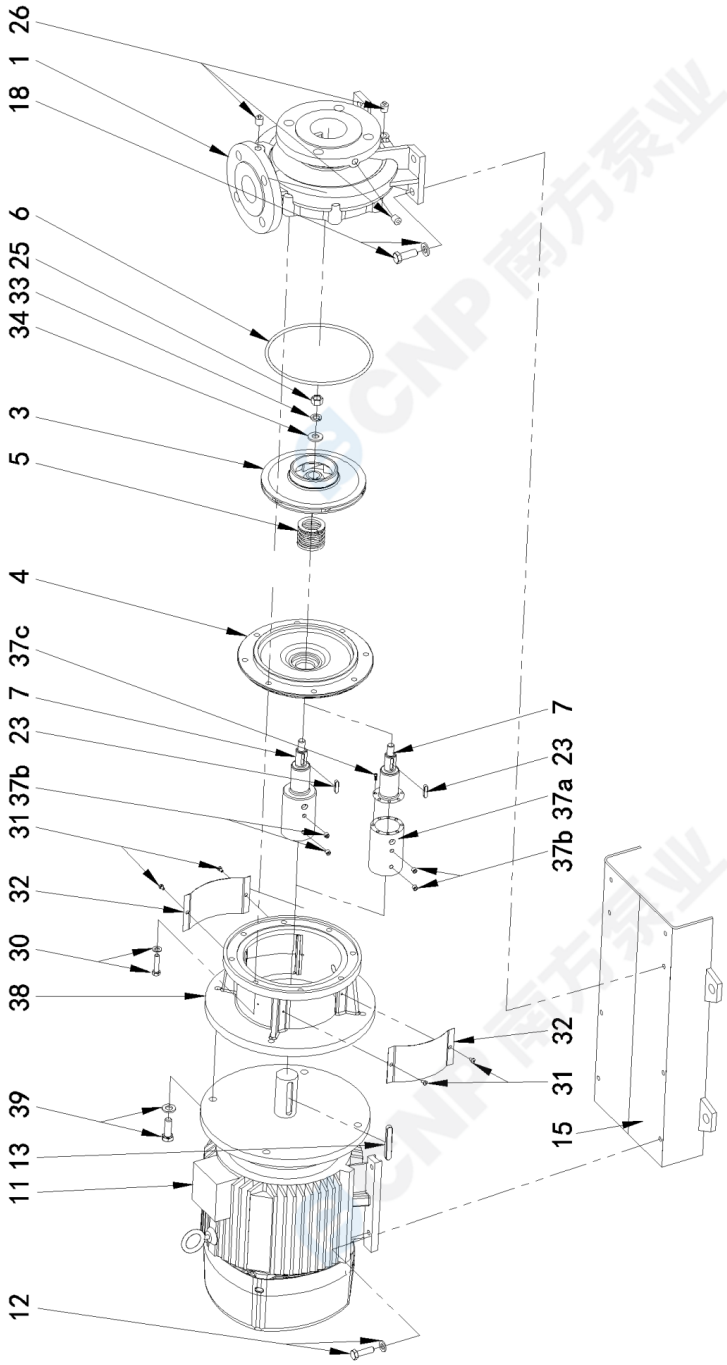


1、Casing
3、Impeller
4、Casing cover
5、Mechanical seal
6、O ring
7、Shaft
11、Motor
12、Screw,washer
13、Key(Motor)
15、Base
18、Bolt,washer
25、Nut
26、plug
30、Screw, washer
31、Screw
32、Coupling guard plate
33、Spring washer
34、Impeller washer
37a、Motor sleeve
37b、Fastening screw
37c、Inner hexagon screw
38、Pump head
39、Screw, washer

E-NIS, NISF-161102



The manufacturer may change the dimensions and specifications without notice.

| CNP 南方泵业 | Physical picture<br>NISF125-100-200/45 | Manufacturer | Nanfang Pump Industry Co.,Ltd (CNP) |
|---|---|---|---|
| | | Address | Hangzhou, Zhejiang, China |
| | | Contact | 86-571-88637351 |
| | | Date | 2026/10/20 |
| Project Name | | Client Name | |
| | | Client Addr. | |
| Item NO | | Contacts | Golsad |
| | | Contact | |

The manufacturer may change the dimensions and specifications without notice.

| CNP 南方泵业 | Order Data<br>NISF125-100-200/45 | Manufacturer | Nanfang Pump Industry Co.,Ltd (CNP) |
|---|---|---|---|
| | | Address | Hangzhou, Zhejiang, China |
| | | Contact | 86-571-88637351 |
| | | Date | 2026/10/20 |
| **Project Name** | | Client Name | |
| | | Client Addr. | |
| **Item NO** | | Contacts | Golsad |
| | | Contact | |

| | |
|---|---|
| Pump model | NISF125-100-200/45 |
| Part NO. | 1100333769 |
| Product price | |
| Quantity | 1 |
| Total price | |

Inquiry notes